# Disclaimer

The materials and information provided herein are believed to be reliable. WORLDPAC, Inc., through WORLDPAC Technical Institute, ("WORLDPAC") does not warrant that the information is complete or accurate and does not make any representation, warranty, guarantee, or endorsement of any of the products, their use, or methods of techniques described in this book or in class. WORLDPAC has not, and expressly disclaims any obligation to independently test any products described in this book or this class.

The reader is expressly advised to consider and use all safety precautions when undertaking the activities described in this book or this class. In addition, common sense should be exercised to help avoid all potential hazards.

WORLDPAC assumes no responsibility for the activities of the student relating to this book or class. The information and materials that are contained herein, including text, diagrams, drawings, and photographs are provided on an "As Is" basis. WORLDPAC MAKES NO REPRESENTATIONS OR WARRANTIES OF ANY KIND, EXPRESS OR IMPLIED, INCLUDING BUT NOT LIMITED TO THE WARRANTY OF MERCHANTABILITY OR WARRANTY OF FITNESS FOR A PARTICULAR PURPOSE.

WORLDPAC shall not be liable for any consequential, special, punitive, exemplary or other damages resulting, in whole or in part, from the student's use or reliance upon the information, instructions, warnings, or other matter contained in this book or covered in class and the student expressly waives such damages.

WORLDPAC Technical Institute Mission – To conduct world-class training for professional technicians and automotive repair facility owners that will improve their ability to diagnose and repair today's vehicles productively and profitably and to create an enjoyable learning experience while adhering to ASE CASE certification activity standards.

***WTI has earned the ASE Blue Seal of Excellence Recognition***

# Welcome to Selling the Invisible Service Solution!

The profit structure of automotive repair shops is changing. Have you ever struggled with a drivability diagnosis and wondered how in the world you are going to get paid for the 8 hours your technician invested in properly identifying the root cause of the client's concern? This course is designed to help you master the skills needed when selling the invisible service solution. The most critical part of profitability for a repair shop is ensuring every segment of time is billed out and collected for every vehicle at the proper rate. This course will demonstrate how to price invisible services in a way that customers will say yes to, as well as creating value for the service provided. We will identify emerging profit centers that will help your shop stay profitable in the next 5-10 years.

## *About your instructor:*

- **President, AdvisorFix**
- **Owner, Freedom Auto Repair**
- **Business Management Trainer, WorldPac Training Institute**
- **Accredited Master Automotive Manager (AMI)**
- **High-Performance Service Advisor Coach**
    - 19,857 Hours logged of Performance Coaching
- **ASE Certified Technician**

Hello, my name is Jeremy O'Neal, and it is an honor to be on this journey with you! I am extremely excited about helping learn how to sell the invisible service solution profitably! Before I get into the material, here is what you should know about me.

I am a hard-working entrepreneur who is passionate about helping my clients create amazing results in their life and business. I have been in the auto repair industry for over three decades, with a large amount of success in jobs such as service advisor, repair technician, and even sales. However, now most of my time is spent coaching and training service advisors on the front lines. In fact, over the last 12 years, I have logged more than 19,857 hours of coaching. Last year I wanted to step it up a notch, so I decided to open Jeremy's Lab in an auto repair shop that I acquired at the end of 2016. This new lab is a place to test out my ever-evolving material and theories with real-life customers! It is very exciting to see what works and what doesn't work.

Let's get to work! I promise this course will deliver an amazing ROI if you apply the material taught. Oh yeah, if you are ever in So Cal, please stop by the shop! I would love to hoist a pint with you or rip a couple of laps at the local motocross track!

## What is the Invisible Service Solution?

The Invisible Service Solution is any service an auto repair shop provides where there is not a physical part being installed on the vehicle. Most shops provide this service in a diagnostic or testing capacity. However, there is an emerging market and trend that was set by the manufacturers of the vehicles. This trend is the need to properly inspect and service a vehicle on an annual basis. There are times where a vehicle will need a service that doesn't involve changing the oil. We need to bring inspections into the equation and as an industry begin to value our technicians time to the point where we charge fairly for their time on inspections and diagnostic services provided.

## A modern-day vehicle is a complex machine.

A modern-day vehicle is a mobile supercomputer. The conditions that a vehicle must operate in today are tough and extreme. To keep this moving fortress on the road it takes a skilled, knowledgeable, and dedicated technician to understand, interpret, and properly repair today's vehicle. As society continues to progress towards the connected and autonomous vehicles of tomorrow, the profitable auto repair shop will have to master repairing a complex vehicle system that needs the human touch.

Facts to point out:

- It often takes a much deeper understanding of the system operating logic to figure out what's setting a code, especially when the cause is not obvious.
- A single connector can have more than 100 wires.
- Today's vehicles could have more than 50 microprocessors on them.
- To make a typical automotive connection, there are a total of 23 separate parts. The main parts are:
    - The shell
    - The pins and sockets
    - The pin retainer
    - The seal

Controlling the engine is the most processor-intensive job on your car, and the engine control unit (ECU) is the most powerful computer on most cars. The ECU uses closed-loop control, a control scheme that monitors outputs of a system to control the inputs to a system, managing the emissions and fuel economy of the engine (as well as a host of other parameters). Gathering data from dozens of different sensors, the ECU knows everything from the coolant temperature to the amount of oxygen in the exhaust. With this data, it performs ***millions of calculations each second***, including looking up values in tables, calculating the results of long equations to decide on the best spark timing and determining how long the fuel injector is open. The ECU does all of this to ensure the lowest emissions and best mileage.

## Consumers, on the other hand, expect us to be able to identify their problems by simply plugging in our scan tool.

If the consumer expectation of the process is simple and easy, how do we properly charge for the time investment used to solve their concerns? To help overcome this obstacle, begin to think about selling automotive repair and maintenance as an invisible service. An invisible service obviously breaks the mold. The days of getting compensated for replacing a physical component have changed. The profitable shop of the future will generate revenue from selling the invisible service solution. Let's look at how to build a business that will thrive in the coming years.

**Moving away from conditioned based repairs to a holistic vehicle healthcare practice is key to profitability in the future.**

Definition of *Holistic: relating to or concerned with wholes or with complete systems rather than with the analysis of, treatment of, or dissection into parts.*

Taking a holistic approach to vehicle care begins the transformation from a transactional parts replacement shop into a relationship based trusted repair shop, that helps the customer protect their investment in their vehicle. This practice turns a liability into an asset and helps the consumer protect their resale value and lower the cost of ownership.
**Lowering the cost of ownership:**

_____

_____

## What types of services can generate revenue as an invisible service solution?

- **Diagnostic Services**
- **Inspections**
- **Adjustments**
- **Updates – Programming**

## Diagnostic Services

## Inspections

- Annual service inspections.
- Brake inspection.
- Annual Heating Ventilation and Air Conditioning Inspection – with an evacuation & recharge to ensure it has proper oil & refrigerant level.
- Cooling system pressure test and leak inspection.
- SRS inspection.
- Maintenance Inspection.
- Steering system inspection.
- Suspension system inspection.
- Accessory belt drive system inspection.
- Exterior lighting inspection.
- Interior lighting inspection.
- B2B inspection. Bumper to Bumper inspection would include all the systems listed above.

## Adjustments / Servicing

- **Weatherstrips:** Apply dielectric silicone grease on weatherstrips to make them last longer, seal better, and not stick or squeak. Lubricate weather strips at least once a year. Hot, dry climates may require more frequent application
- **Body Component Lubrication**: Lubricate all key lock cylinders, hood hinges, lift gate hinges, steel fuel door hinge and power assist step hinges, unless the components are plastic. Applying silicone grease on weatherstrips with a clean cloth will make them last longer, seal better, and not stick or squeak.
- **Clear debris from air intake passages.**
- **Underbody Maintenance**: At least twice a year, spring and fall, use plain water to flush any corrosive materials from the underbody. Take care to thoroughly clean any areas where mud and other debris can collect. If equipped with power running boards, extend them and then use a high-pressure wash to clean all joints and gaps.
- **Door latch and striker.**
- **Resetting Basic Settings.**
- **Throttle Body Relearn procedure.**
- **Tire Balancing**

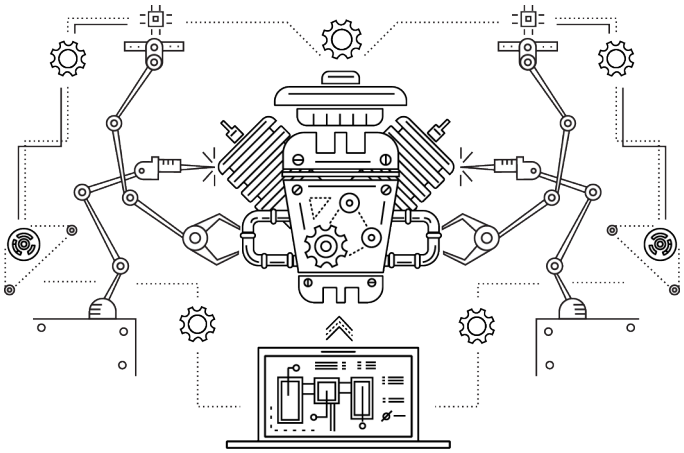

# Updates & Programming

Whether it is a personal computer, cell phone, or tablet, consumers are asked all the time to install a software update. As manufacturers collect real-world data from the vehicles their dealer network services, they make changes to the software the vehicle uses. Reflashing or Reprogramming can be an integral part of a shop's future income stream.

## *Building a profitable system to reprogram:*

The tools you will need:

- Pass-through device.
- How to charge for these services.
- Access to the OEM's website to see if the vehicle has the latest version of the software.
- Attend Technical Classes on Reprogramming
- Have a shop meeting with your technicians.
    - Schedule enough time to complete this. Typically, a Saturday morning or an evening session. A 3-hour window will get you a good start. It might take a couple of meetings to perfect this.
- Determine what vehicles you will be programming.
- Begin building your packages
- Create a checklist for each package with spaces for the technician to initial each line item – hold them accountable.
- Estimate the amount of time your technician will spend on each car and build the pricing appropriately.
- When pricing out the programming, consider selling it as a separate service and do not include it in any of your other diagnostic packages.

## *Notes:*

The True Cost of Performing Diagnostic Services

| Number of Technicians | Hours Per Day Testing | Labor Revenue | Parts Revenue | Lost Revenue |
|---|---|---|---|---|
| 1 | 2 | 125 | 0 | 250 |
| 2 | 2 | 125 | 0 | 500 |
| 3 | 2 | 125 | 0 | 750 |

***If the Diagnostic Services that we sell don't generate parts revenue, then the cost to provide these services per year is $65,000 in lost revenue, per technician, per year!***

1 Technician =
2 Technicians =
3 Technicians =

Auto Repair Shop Revenue Per Hour

| Job | Labor | Parts | Revenue Per Hour |
|---|---|---|---|
| Advanced Diagnostic Drivability Service | 375.00 | 0.00 | 125.00 |
| Timing Belt Replacement | 375.00 | 375.00 | 250.00 |
| Front Brake Job | 187.50 | 98.00 | 190.33 |
| Annual Maintenance Package with Spark Plug Replacement, Timing Belt Kit with water pump, Cooling System Flush, Replacement of cooling system hoses, and Front & Rear struts with Alignment | 1250.00 | 2250.0 | 350.00 |

# Understanding the Auto Repair Consumer Mind

When a person experiences a problem with their vehicle, there is a tremendous amount of fear associated with the problem. Most people do not understand auto repair or how a vehicle works. When they experience this problem, there is a triggering event that takes place. The triggering event is what we label as the "symptom" or "concern." By the time a customer reaches out to us for help (usually in the form of a telephone call) they have done some research on their issue.

**Exercise:** *Take a moment and put yourself in your customer's driver's seat. You are on your way to work and while sitting in bumper to bumper traffic your vehicle dies and will not restart. The horns start to honk, and you are frantically trying to get the vehicle to restart with no luck. With a little help from a good Samaritan, you can get your vehicle pulled over to the side of the road. Right now, document the emotions you are feeling and if you were to call a shop how would you want them to help you?*

**What emotion are you feeling in the moment of your triggering event?**

_____

**How would you want the shop to respond to you?**

_____

**Is this any different than how you respond to a customer now?**

_____

**What can you change to deliver the help the customer is asking you for?**

_____

When a customer experiences a problem with their vehicle, the trusted service advisor will do two things:

1. Ease the customers fear
    a. We are going to take care of you.
    b. You are at the right shop.
    c. Our process is designed to save everyone time and money.
    d. We offer the best repair warranty in the business.
        i. Hassle Free Promise.
        ii. Fixed Right the First Time.
        iii. Fixed on Time.
        iv. You will leave on cloud 9.

2. Educate them about the process needed to complete the RCA (Root Cause Analysis)

## ***TAKE NOTHING FOR GRANTED***

Today's vehicles are so complex that a shop cannot afford to guess when it comes to solving a client concern with their vehicle. Even the simplest concern could lead to an expensive repair. We live in an age that demands precision! Technicians must have the specific knowledge, expertise, and skill to properly repair vehicles today. One of the costliest errors a shop can make is wasting time during the diagnosis process. Concerns that once took minutes to identify the root cause of the failure can now take hours even days. Let's begin by looking at the steps needed to master selling the invisible service solution.

***It is our job as the Trusted Service Advisor to probe, inquire, and identify the hidden information that consumers simply don't realize is relevant. The moment leading up to a triggering event is key.***

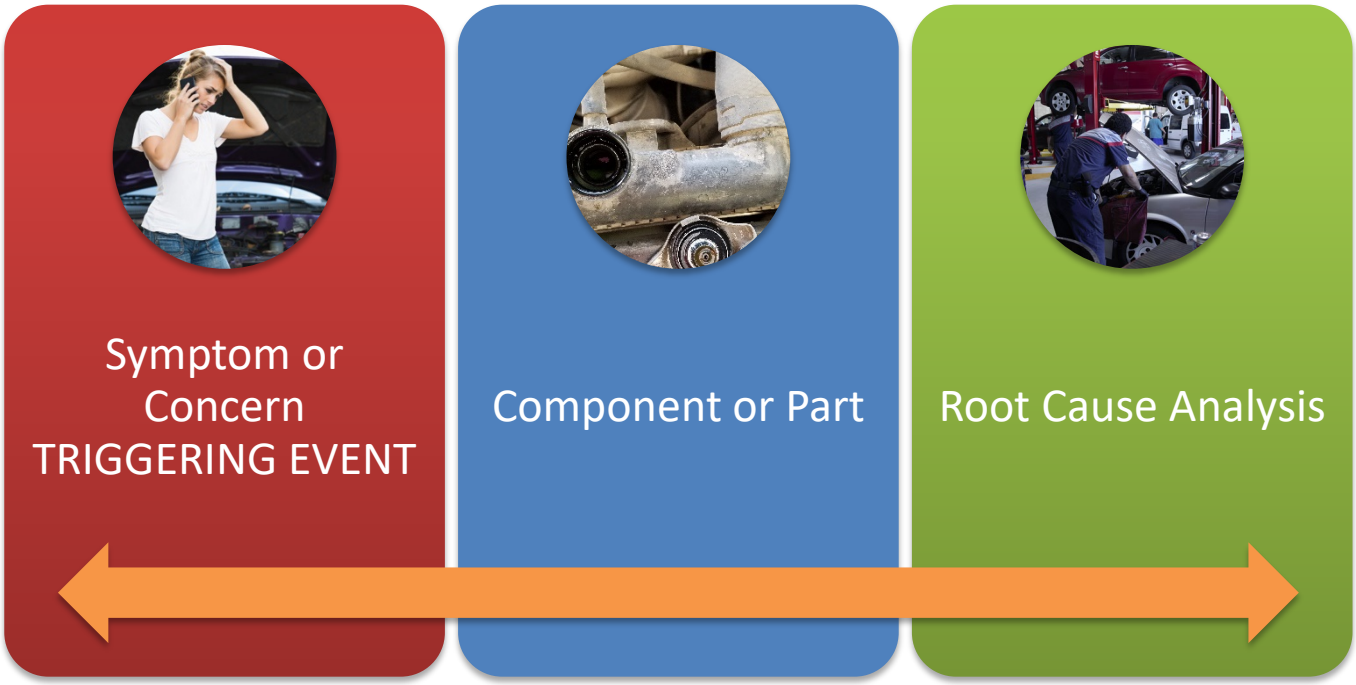

# Converting the Lead. Get the customer into the shop!

When a customer has an issue with their vehicle, they typically will call your shop with a request for pricing on a certain component. It is your job to remove the friction from the phone call and deliver what the customer wants at the time that they want.

IWWIWWIWI
_____ _____ _____ ___ _____ _____ _____ _____ _____!

Anything that you do outside of providing information for your caller is going to create friction.

Take a moment right now and identify how you would respond to these Quote request from customers:

### *Caller #1 – I have a 2007 Mini Cooper and I need a price on spark plugs:*

Document your natural response:

_____
_____
_____

### *Caller #2 – I have a 2005 Toyota 4 Runner, and I need a price for an ABS Control Module.*

Document your natural response:

_____
_____
_____

### *Caller #3 – I have a 2007 BMW 750i, the reduce power engine malfunction light is on, how much do you charge to diagnose this?*

Document your natural response:

_____
_____
_____

**Case Study: 2007 BMW 750i**
Client Concern: Check Engine light has been on for 2 months. Reduce power engine malfunction came on last night. Need to tow the vehicle in. How much for you to diagnose this concern?

Step #1 – Is this a customer you want to work with?

Step #2 – Which step is best for your shop and the customer?

- ☐ Initial Assessment?
- ☐ Level 1 Testing?
- ☐ Advanced Level Testing?

Step #3 – How much are you going to quote over the phone? Are you able to convert the lead?

**Initial Assessment Discovery:**
Series: E65
Model Type: 750i Sedan
Model Year: 2007
Engine: N62TU
Trans Type: Auto
Mileage: 157771
History: Original Owner, new to the area. Customer has all service records.

DME Codes:

| | |
|---|---|
| 2B98 | Control unit internal fault, ram backup |
| 2D00 | Throttle valve actuator |
| | |
| | |
| | |
| | |
| | |
| | |

# Converting the Lead, Get the customer into the shop!

Here are the most common items we hear service advisors say to customers that creates friction:

- I need my technician to evaluate your car before I can give you a price.
- Without seeing your car, I will not be able to quote you accurately.
- You could have multiple issues with your car.
- We need to begin with some testing before we can give you a price.

## *Rules for converting the lead:*

- Be Friendly and Helpful.
- Use an accommodating response.
- Utilize the Initial Assessment tool when appropriate.
- Use your Fair Pricing tool when appropriate.
- Use tools that make you an expert. Identifix, Alldata, Mitchell, factory level information systems.
- Ask for the appointment.

**Use a lead tracking form to convert your lead and keep track of your leads.**

# Lead Conversion Guide

1. It's a great day at _____ this is _____ how may I help you?

2. "OK…I'll be happy to help you with that…I'll just need to get a little information from you…

"What's the year _____, make _____, and model _____ of the vehicle?"

3. "By the way, my name is _____ May I ask who I'm speaking with? _____

4 Great! Do we have this vehicle on file? (If yes) ok let me bring up you are your file
(If No) Have you been in before? (If No) Welcome to the family! We will take excellent care of you!
What's a good phone number for you?

And you email address? _____@_____

***Have a conversation with your customer and begin to build the relationship. Focus on building the relationship.***

5. " _____ What's going on with the _____ or What's happened to yours?___

Why do you suspect you need _____?" Moreover, how long has it been doing this?_____

" _____ there are a number of things that can cause what you are describing

6. The best way for me to help you is to have one of our certified technicians perform our _____. It's the first step in getting your vehicle properly diagnosed and repaired in the most affordable way. I have an opening right now or I can get you in at __ o'clock. Which would you prefer?

7 "OK. I have got you scheduled in for a ____ system inspection at _____ o'clock. (If New) Do you know how to find us? Excellent! My name is ___, and I look forward to meeting you at __ o'clock.

**Name_____ Phone _____**
**Email _____Source _____**
**Year _____ Make _____ Model _____**
**Appointment Yes / No: Date and Time _____**

## Using the Initial Assessment as a vehicle acquisition tool:

***There will be times where it is appropriate to utilize a step before going into Level-1 Testing. This concept focuses on capturing first-time customers and making them feel comfortable with coming down to your shop and getting to know you. Once the customer is at your shop, you will be far more effective in person. The principle of this concept is to help you (the service advisor) do two things:***

1. **Save time:** By being able to offer a Free Assessment, you effectively cut down the amount of time you will be spending on the phone attempting to convert a phone lead. I am sure you will agree with me that it is more effective to sell in person rather than on the phone.
2. **Increase profits by increasing your lead conversion rate.** Experience shows this has a direct impact on your car counts & gross sales.

Keep in mind the Initial Assessment is designed to get the customer off the phone and have them bring the vehicle down to the shop. We will look at the verbiage on the next page, for now, let's look at what some shops have created to make this effective.

- A quick under-hood visual inspection to see if there are any obvious defects or malfunctions with the under-hood system.
- A quick basic computer scan to identify Diagnostic Trouble Codes. Helping you identify how many systems are involved in the client concern.
- A review of the vehicle service history.
- A review of the vehicle time-line.

Many people can perform this basic Initial Assessment. Keep in mind this process not only helps save the customer time and money, but it also allows them the opportunity to see your facility and become comfortable with your business and repair process. Once you have the above information, you are now in a better position to advise the customer on the proper diagnostic path that best suits their needs.

Notes:

**Sample Verbiage:**

*Mr. Customer based on the concerns you have just described, it is in your best interest to bring the vehicle down so we can perform our Initial Assessment of the diagnostic process that best suits your needs as well as the needs of your vehicle. This process is designed to save you time and money; I will need you to do a couple of things:*

- *Please bring the service records that you have for the vehicle.*
- *Please confirm the time that works best for you.*
    - *Now or 2 pm today?*

*Once you arrive at the shop here's what we will do. A member of our team is going to assess the following systems on your vehicle:*

- *A quick underhood visual inspection to see if there is anything obvious going on that we can correct right away.*
- *A quick scan of the computer system to identify how many hard failures the vehicle has identified as well as identifying how many systems are involved in resolving your concern.*
- *I will review your service history.*
- *Together we will discuss your vehicle timeline, so we can make sure any amount of money you invest in the vehicle is the right amount of money based on your goals with the vehicle.*

*Does all that make sense? Great, I have got you confirmed for 25 minutes from now. Do you know how to find us? I look forward to meeting you.*

Notes:

_____
_____
_____
_____
_____

***The 6 Steps to Selling the Invisible Service Solution***

1. **Build a great repair order.**
2. **Deliver amazing customer deliverables.**
3. **Create your testing/analysis packages.**
4. **Identify your testing/analysis packages up front and charge a fair price for them.**
5. **Perfect your sales presentation.**
6. **Consistently monitor your packages & make the proper adjustments.**

**Notes:** _____
_____
_____

## Step #1: Build a Great Repair Order


**As a Trusted Service Advisor, your job is to help your client protect the investment they have made in their vehicle in the most affordable way. Your job also carries the responsibility of creating *profitable sales* for your company. Before we get into the financial aspect of properly charging for your services, let's first look at how to properly document each client concern.**

- Each client concern needs to have a separate labor line and corresponding labor charge.
- Write down as much information as possible, don't be afraid to state the concern exactly the way the client says it. Utilize technology when appropriate, audio samples, video samples, and worksheets.
- Be cautious when interpreting information, things can get lost in translation.

When performing the initial vehicle write up, do yourself a favor and slow down. Too many service advisors rush through the write-up process. The write-up period is perhaps the most critical time of your interaction with your client, as this is where we gather the data we need for our transaction. Ensure you have proper back up on the service drive and that you give your client your full undivided attention. You want to be a great detective and ask probing questions during the intake process. When dealing with a repair client ensure you have the service records. You may need to road test the vehicle with the client especially when dealing with noises. It is also very important to identify the driver of the vehicle, to ensure you are getting the correct information.

# Clear and Efficient Communication Systems are critical to your success.

Top performing Service Advisors are experts at writing a good repair order. Removing verbal communication is key to a high performing shop. Every time you talk to a technician, it robs your shop of profits. The average shop should generate between $3 - $6 per minute in revenue. A three-minute verbal conversation will cost the shop $9 - $18 for that conversation.

Learn to keep verbal communication to a minimum.

Below are the core components needed when describing a client concern:

- Is the concern consistent or intermittent?
- How long has the concern been occurring?
- Is the concern temperature related?
    - Vehicle temperature cold or hot?
    - Ambient temperature cold or hot?
- Vehicle Service Records.
- If it is a noise, can the client identify the noise for you? (make sure you properly document the noise, use a digital voice recorder or a video camera during the road test)
- Be specific on documenting when and where the concern happens. Use local geographical points of interests.

The specific steps you take to communicate what you expect from your technician, along with providing the right information from the customer can make the difference between being profitable or losing money on a repair. One of the most common causes of lost time, revenue, and technician frustration is lack of clear communication from the service advisor.

**When dispatching the repair order to your technician follow these steps:**

- Ensure all paperwork is in order and is in a format that is easy to read.
- A properly written repair order will communicate the expectations placed upon the technician.
    - Each Labor line should identify the expectations from the technician
    - When reviewing concerns that require diagnostic services be sure to set clear expectations for the following:
        - Time investment by the technician
        - Resources that the package includes. It is important to understand what resources the technician will need to properly test the systems involved in the concern. These include but are not limited to: scan tools, information resources (Identifix, Alldata, Mitchell, IATN.) Lab scope, Technical Service Bulletins.
        - Identify the data that you require from the testing. These include but are not limited to fluid level and conditions, battery test results, charging system test results, fault codes stored, the physical condition of wiring.
        - Completion time of the testing process
        - A clear understanding of what the test includes when it concludes, and what to do if the results are inconclusive and there are further tests needed.

**As you begin to gain more experience within your shop, the need for verbal communication will decrease. A good repair order should be able to be read by the technician, and tell the story of how to proceed.**

## Step #2 Customer Deliverables

Failure to deliver evidence of the information gained during the testing procedure leads to frustration for the customer. To provide value for the services rendered it is critical to provide evidence of the information collected and a completed checklist.

## What to include in your customer deliverables?

Data packages printed out, shared and stored electronically.

What should be in your data package:

- Baseline checklist completed and signed by the technician.
- Data stream printout.
- Waveform printouts of the failure.
- Wiring diagrams.
- Testing procedures used.
- Technical Service Bulletins, Service Information Bulletins.
- Photos of failed components.
- Videos of failed components.
- The failed component.

# BUICK - GMC

14555 Civic Drive **VICTORVILLE, CA** 92394

www.gm.com

**INVOICE ORIGINAL**
**Work Order**
**#227490**
**Freedom Automotive**
**February 06, 2018**
**Svc.Adv**
**Cust.Ph.** **(760) 956-9993**
**Tag# 064**
Page 1 of 2
02/12/2018 11:24:13

| To: **Freedom Automotive** | Year: 2015 **Veh Id: 76197** Unit #: |
|---|---|
| **16941 Walnut St** | Make: Chevrolet — License #: |
| | Model: Tahoe 2WD — Odo. In: 50,231 |
| | Color: Unknown — Odo. Out: 50,261 |
| **Hesperia** **CA** | V.I.N.# : 1GNSCAEC555443 — **Next Service:** |
| **92345** | Date In: 02/06/2018 — In Service Date: 09/12/2014 |
| | Out: 02/08/2018 — Cases: 3 |
| | Ext. War: - - ( mo/ ) - D: $0.00 |
| | Promised Time: 02/06/2018 05:00:00 PM — Call When Ready: No |

**Case: 1** Tire Pressure Check ( Check & adjust tire pressures)

| Quantity Description/Correction | Origin: | Price | Total |
|---|---|---|---|
| | | $0.00 | $0.00 |

Tech Cause: 32 psi
Tech Comments: 32 psi
Completed by Technician number: 1033

**Misc** $0.00 **Labor** $0.00 **Parts** $0.00 **Prepaid Parts Amt:** $0.00 **Case Total:** $0.00

**Case: 2** starts intermittinely when applying accel and vehicle will not go check engine light came on intermittinely will not go over 40 mph check and advise

| Quantity Description/Correction | Origin: | Price | Total |
|---|---|---|---|
| | | $0.00 | $0.00 |

Tech Cause: no codes present in ECM, road test several times approx 30 miles driven and retest, no codes present in ECM, could not duplicate/verify concern at this time
Tech Comments: not duplicated - Warranty
Completed by Technician number: 1033 $0.00 $0.00

**Misc** $0.00 **Labor** $0.00 **Parts** $0.00 **Prepaid Parts Amt:** $0.00 **Case Total:** $0.00

**Case: 3** states radio and infotainment system inop, cust replaced with module (incorrect one came out of an impala) provide est for module

| Quantity Description/Correction | Origin: | Price | Total |
|---|---|---|---|
| | | $125.00 | $125.00 |

Tech Cause: Radio working at this time, several road tests, could not duplicate/verify concern at this time
Radio part # 13592791
Incorrect radio installed in vehicle, POSSIBLE OTHER CONCERNS ALSO
Tech Comments: radio worked as designed, however it does have incorrect radio installed for vehicle
Completed by Technician number: 1033

**Misc** $0.00 **Labor** $125.00 **Parts** $0.00 **Prepaid Parts Amt:** $0.00 **Case Total:** $125.00

$0.00

**Declined/MPVI Op Codes**
: $ 39.00 diag for check out per customer request

| Work Order #2428 | Customer Info | 2015 Chevrolet Tahoe |
|---|---|---|
| Advisor: Jeremy Oneal<br>Technician: t121 | | 1GNSCAEC7F<br>Odometer: 46873<br>Plate:<br>Fleet Number: 4940 |

## Level 1 Testing & Analysis Package $171.51

Customer Request Identify Root Cause of Radio, On Star, Power Accessory outlets, and back up camera do not work. Performed Level 1 testing: Identified client concern.
ROOT CAUSE ANALYSIS = VEHICLE HAS THE WRONG RADIO MODULE INSTALLED. The radio head unit and module need replacing. Refer to photo of the incorrect module

| LABOR |
|---|
| Retrieve DTC |
| Perform Baseline Inspection |
| Verify client concern |
| Road Test |
| Research Applicable TSB's & Identify Repair Path |
| Pinpoint Testing on identified Components |

| HAZMATS AND FEES | QTY | FEE | PRICE |
|---|---|---|---|
| Additional Resource Fee | 1.0 | $12.51 | $12.51 |

Labor: **$159.00** Parts: **$0.00** Fees: **$12.51** Total: **$171.51**

| | |
|---|---|
| Total Labor: | $159.00 |
| Total Parts: | $0.00 |
| Total Fees: | $12.51 |
| Total Sublets: | $0.00 |
| Sales Tax: | $0.00 |
| Grand Total: | **$171.51** |

**Inspection Report:**

**Level 1 Testing & Analysis Package**

| | |
|---|---|
| ✔ | Fluid Levels Full & Condition |
| ✔ | External Wiring |
| ✔ | Filters |
| ✔ | Intake Air System |
| ✔ | Fluid Leaks |
| ✔ | External Wiring Connections |
| ✔ | Basic Engine Operation |
| ✔ | Battery Corrosion |
| ✔ | Battery Load Test |
| ✔ | Charging system |
| ✔ | Cooling System / Electrolysis |
| ✔ | Accessory Belt Drive System |
| ✔ | PCV System |
| ✔ | Rodent Damage |
| ✔ | **Scan Computer system and record Data** |
| ✔ | **Research Tech Information System** |

#PIT5405B: REDUCED POWER STEERING ASSIST ENGINE STALL IPC / RADIO / HVAC GOES BLANK VARIOUS DTCS (AUG 17, 2016)
Subject: Reduced Power Steering Assist Engine Stall IPC / Radio / HVAC Goes Blank Various DTCs
Models: 2015-2016 Cadillac Escalade Models
2014 Chevrolet Silverado 1500
2015-2016 Chevrolet Silverado, Suburban, Tahoe
2014 GMC Sierra 1500
2015-2016 GMC Sierra, Yukon Models

This PI was superseded to add additional causes. Please discard PIT5405A.

The following diagnosis might be helpful if the vehicle exhibits the symptom(s) described in this PI.

Condition/Concern
Some owners may comment of any of the following issues:

Reduced or loss of power steering assist (only LD models equipped with electric power steering)
Engine stall
IPC going blank or inoperative
Radio/ICS going blank
HVAC going blank
Hood ajar message and/or dome lamps flash when shifting into reverse
Alarm sounds when locking doors
Wipers continue to run for a short time after turning off and then stop/park in the incorrect location
Any of the following DTCs: U0073, U0078, U0029, U0028, U0415, U0140, U0126, U0121, U0101, U0100, C0544, C0710, U1510, B127B, B2605, B3600, C0800, U0428, U0452, U0131, and P0513
These concerns could be caused by any of the following issues:
A poor BCM ground at G218.

A shorted B+ Battery cable (3) at the Starter Solenoid caused by:
A loose starter shield contacting the starter battery cable terminal ring
A starter cable ring terminal that has been mis-installed and/or rotated when installed on the starter solenoid.
Battery cables with high resistance and/or loose connections at the:
Battery fuse block
Positive or negative battery cables
A discharged or faulty battery.
A loose connection at the main power and ground 2-way connector (X183 or X133 depending on model) for the power steering rack.

Review Service History

Road Test

**Notes:**


20171214_084944.jpg


20171214_084904.jpg


20171214_085001.jpg


20171214_084952.jpg


20171214_085001.jpg


20171214_084940.jpg

Written by Freedom Auto Repair at 8:51AM 12/14/17


- DURING PURCHASE -
↳ THIS IS OUT OF PR
- IDENTICAL -
GM P/N: 1359 2791
103BU2M
1359 2791
CONNECTOR

**#PIP4670D: DO NOT SWAP MODULE...**

#PIP4670D: DO NOT SWAP MODULES IN VEHICLES WITH GLOBAL ELECTRICAL SYSTEMS (JAN 23, 2014) Document ID# 3688954

**#PIP4670D: DO NOT SWAP MODULES IN VEHICLES WITH GLOBAL ELECTRICAL SYSTEMS (JAN 23, 2014)**

**Subject:** **Do Not Swap Modules in Vehicles With Global Electrical Systems**

**Models:**
**2010-2015 Buick LaCrosse**
**2013-2015 Buick Encore**
**2011-2015 Buick Regal**
**2012-2015 Buick Verano**
**2014-2015 Cadillac CTS Sedan**
**2010-2015 Cadillac SRX**
**2013-2015 Cadillac ATS, XTS**
**2014-2015 Cadillac ELR**
**2015 Cadillac Escalade Models**
**2010-2015 Chevrolet Camaro, Equinox**
**2011-2015 Chevrolet Cruze**
**2014-2015 Chevrolet Caprice PPV, Corvette, Impala, SS**
**2014 Chevrolet Silverado 1500**
**2015 Chevrolet Colorado, Silverado, Suburban, Tahoe**
**2012-2015 Chevrolet Sonic**
**2013-2015 Chevrolet Spark**
**2014 Chevrolet Spark BEV**
**2013-2015 Chevrolet Trax (Canada Only)**
**2012-2015 Chevrolet Volt**
**2014 GMC Sierra 1500**
**2015 GMC Canyon, Sierra, Yukon Models**
**2010-2015 GMC Terrain**

**This PI was superseded to update model list. Please discard PIP4670C.**

The following diagnosis might be helpful if the vehicle exhibits the symptom(s) described in this PI.

**Condition/Concern**

A technician may comment of a no start or another concern after swapping an ECM or other modules from one vehicle to another.

**Recommendation/Instructions**

The Global Architecture electrical system associated with these vehicles does not allow controller swaps between vehicles. Swapping ECMs or other modules (including Radio, BCM, EBCM, SDM, TCM, ECC (HVAC), EPS, HPCM, & IPC) between two vehicles with the Global Architecture electrical system will result in damaging both controllers (A NO START CONDITION WILL OCCUR ON BOTH VEHICLES IF THESE MODULES ARE SWAPPED) due to the new vehicle security code protocol (environment) starting with the 2010 MY GDS applications.

**ADDITIONAL SI KEYWORDS:**

B389A B3902

Please follow this diagnostic or repair process thoroughly and complete each step. If the condition exhibited is resolved without completing every step, the remaining steps do not need to be performed.

GM bulletins are intended for use by professional technicians, NOT a "do-it-yourselfer". They are written to inform these technicians of conditions that may occur on some vehicles, or to provide information that could assist in the proper service of a vehicle. Properly trained technicians have the equipment, tools, safety instructions, and know-how to do a job properly and safely. If a condition is described, DO NOT assume that the bulletin applies to your vehicle, or that your vehicle will have that condition. See your GM dealer for information on whether your vehicle may benefit from the information.

WE SUPPORT VOLUNTARY TECHNICIAN CERTIFICATION

# Step #3 Create Your Testing / Analysis Packages

As a sales professional, it is critical to know your product. Most shops fail in selling the invisible service solution because they simply don't know what to offer.
From today forward don't sell labor hours. Customers do not want to buy your labor hours, what they do want, is the result of what your fees will give them, a properly performing, dependable vehicle. Although we will have labor hours in our packages, we do not sell our customer the labor hours. What we sell them is a testing & analysis package. This package includes many different things that deserve compensation.

***Building your Diagnostic Packages:***

*For the sake of clarity, we are going to move into the technical world for this session. This session will be focused on helping you build the technical side of your testing / analysis packages. This is done in an effort to help you understand what you are selling your customer. The language we use in this section will be for internal use and NOT used when selling a package to your client.*

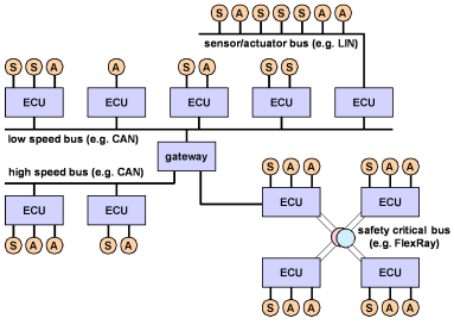


## *Examples of Different Levels of Diagnostic Packages:*

| Level 1 | Advanced Level Testing | Advanced Level Testing |
|---|---|---|
| •Concern can be duplicated at all times<br>•1 system<br>•1 hour or less<br>•1 or 2 DTC's stored<br>•No driveability concerns | •Intermittant or consistent concern<br>•Isolation tests in 1 or more systems needed<br>•1-3 hours<br>•2+ DTC's stored<br>•Driveability or emission concerns | •Pandoras box<br>•Has been to multiple shops without successful repair<br>•Mulitple day testing process<br>•Typically takes 3+ hours to source root cause |

## *Level 1 Test:*

Think of level 1 as building the foundation for a successful repair process. If your technician skips anything in this part of the test, it could lead to a misdiagnosis or a comeback. This step will evaluate the vehicles overall condition and help isolate and identify where additional testing may be required. If you want to maximize profits when selling these tests, you will begin with a good baseline test. ***The goal of the baseline test is not to repair the vehicle***. Although there will be times where the technician does identify the source of the client concern with this test, the goal should be to properly identify what types of tests are going to be necessary for resolving the client concern. At the conclusion of this test you should have the following answers:

- What system is the isolation test going to take place?
- What steps are needed to pinpoint the cause of the concern?
- How much time will the technician require to perform these tests to completion?
- What condition the base-line systems are in, and are any repairs needed before proceeding with advanced level testing?

Level 1 Testing can cover a multitude of systems. This package is useful when identifying concerns with systems that are not normal. For instance; if you have a client requesting an A/C service and the technician does his initial inspection of the A/C system and discovers the compressor will not come on due to not receiving power, you could sell the customer a Level 1 electrical HVAC analysis. The basic mechanical function inspection remains the same, and then the technician would spend a specific amount of time working on the electrical system tracing the power problem. By taking a holistic approach to diagnosing the vehicle you will eliminate problems that come up in other systems.

**Notes:**

_____
_____
_____
_____
_____

# Example of a Level 1 Checklist

Auto Repair Level 1 Test Baseline Checklist

- ☐ Fluid Levels Full / Condition _____
- ☐ Visual inspection: wiring, wiring connectors, sensor installation, fluid leaks, ground wires, sensor contamination, air intake boots & connections, motor mounts, vacuum hoses, coolant hoses, belts, oil cap, pcv system, rodent damage or evidence of rodents.
  _____
- ☐ Battery Test Voltage _____ Load Test P / F Overall condition _____ is there any corrosion on the battery cables? _____
- ☐ Charging system test _____
- ☐ Test coolant for voltage _____
- ☐ Accessory Belt Drive System.
- ☐ Scan for DTC's, readiness status & Vehicle Data ***Record findings on Technician Work Sheet* DO NOT CLEAR ANY STORED DTC'S**
- ☐ Record any Freeze Frame data.
- ☐ Research TSBs or SIB's.
- ☐ Research iATN and Identifix ***don't rely on this for diagnosis, you must verify***
- ☐ Research applicable DTC's to determine next step in the pinpoint diagnosis process.
- ☐ Visually inspect MAF. Is it within range?
- ☐ Does engine reach proper operating temperature?
- ☐ Review Service History, has proper maintenance been performed? Y / N
- ☐ Road Test vehicle.
  Notes: _____

**Test Results:**

- ❖ What system is/are the isolation test/s going to take place in? _____
- ❖ What steps are needed to pinpoint the root cause of the concern? _____
- ❖ How much time is required to perform these tests to completion? _____
- ❖ Repairs needed prior to proceeding with advanced level testing? _____

## Moving into Advanced Level Diagnostics

There will be times when the Level 1 testing discovered the root cause of the client's concern, and you were able to repair the vehicle. However, for those tough drivability concerns and phantom issues that vehicles have, there might be the need for a more advanced level of diagnostic testing. Typically, the types of tests that we perform during Advanced Level Analysis will include many pinpoint tests on certain input sensors, waveform analysis of specific components, and other specific component level testing. These tests can require time, and the unfortunate part of testing at this level is the amount of set-up time required to acquire the data needed. We have to build the proper package with the right balance of time for our technician and revenue recovery for the shop. During an Advanced Level Analysis, there is more specific testing equipment used to factually determine what has failed.

Notes:

_____

_____

_____

### *How to build your packages:*

Have a shop meeting with your technicians:

- Schedule enough time to complete this. Typically, a Saturday morning or an evening session. A 3-hour window will get you a good start. It might take a couple of meetings to perfect this.
- Determine how many levels of testing packages you are going to offer.
- Begin building your packages (use the form attached. For a pdf download visit Advisorfix.com)
- Create a checklist for each package with spaces for the technician to initial each line item – hold them accountable.
- Estimate the amount of time your technician will spend on each level and build the pricing appropriately.
- When pricing out your packages consider adding additional dollars to the package in addition to the billed labor amount to compensate the shop for diagnostic equipment, subscription services, additional resources used during the testing process.

# Advanced Level Testing

Guide for building and documenting Advanced Level Testing procedures:

- Document the stored DTC's.
- Document Data stream printout.
- Document Waveform analysis.
- Document measurements.
- Take photos of active testing procedures and record on the repair order for the customer.
- Take videos of active testing procedures and record on repair order for a customer. Share the link with the customer for review at vehicle delivery and as a backup for future failures.
- Document wiring diagrams used. Make color copies of the technician's notes on the wiring diagram.
- Document the results of pinpoint testing.
    - Pressure testing.
    - Leak testing.
    - Volume testing.
    - Voltage testing.
    - Resistance testing.
    - Testing for grounds.
    - Fuse testing.
    - Visual inspection of installed components.

| Graph | ECU | Name | Value | Units |
|---|---|---|---|---|
| ✔ | PCM | Fuel Level Percent | 57.000 | % |
| ✔ | PCM | Hi Spd Fan Des State | Off | |
| ✔ | PCM | Lo Spd Fan Rly Des State | Off | |
| ✔ | PCM | Injector Pulse Width Cylinder 1 | 1704 | US |
| ✔ | PCM | Injector Pulse Width Cylinder 2 | 1576 | US |
| ✔ | PCM | Intake Air Temp Volt | 3.8860 | Volts |
| ✔ | PCM | Knock Sensor 1 Volts | 0.32097 | Volts |
| ✔ | PCM | Knock Sensor 2 Volts | 0.13924 | Volts |
| ✔ | PCM | MAP Vacuum | 20.83 | in Hg |
| ✔ | PCM | Map Volts | 0.8310 | Volts |
| ✔ | PCM | MDS In V4 State | False | |
| ✔ | PCM | MDS Status | Inactive | |
| ✔ | PCM | NGC is in OK to Run Mode | True | |
| ✔ | PCM | Oil Pressure | 48 | psi |
| ✔ | PCM | Output Speed | 1122 | rpm |
| ✔ | PCM | Turbine Speed | 841 | rpm |
| ✔ | PCM | Pedal Position Sensor | 0.6863 | Volts |
| ✔ | PCM | Present Gear | Fourth ... | |
| ✔ | PCM | Present Gear TCC State | Unlocked | |
| ✔ | PCM | Purge Duty Cycle | 0.0000 | % |
| ✔ | PCM | S/C Disenable Reason | Remain... | |
| ✔ | PCM | S/C Set Speed | 0 | MPH |
| ✔ | PCM | S/C Working Status | Off | |
| ✔ | PCM | Spark Advance | 11.0 | Engi... |

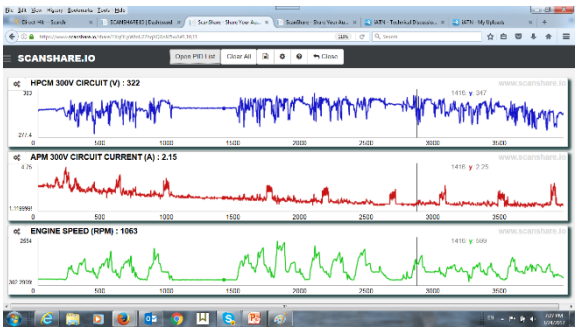


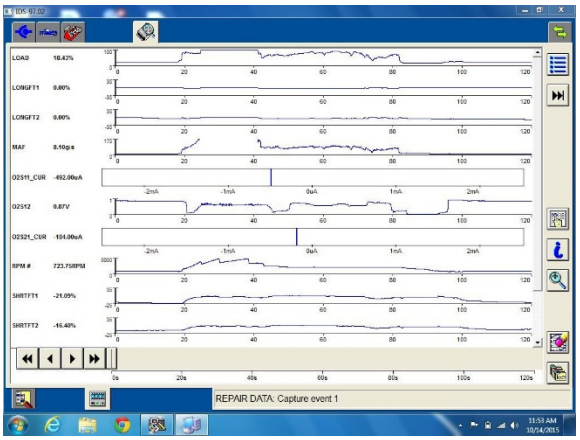

## Step #4 Identify your testing/analysis packages up front and charge a fair price for them.

At this point, you now have your diagnostic packages identified, and now it is time to put a fair price on them. Let's look at the formula to ensure you receive fair compensation.

## Formula for pricing testing/analysis packages

Identify how many hours your technicians are going to bill for each package. For our example, we will use 1.0 hours for the Level 1 Base-Line test. Once you have identified the billable hours for the package you then need to compute the dollar value of the labor charge; we do this by multiplying our billable hours by the shop labor rate.

**Technician Billable Hours: 1.0 x $125.00 (shop labor rate) = $125.00**

Labor rate multiplier. Because we have one of our highest skilled technicians working on the vehicle, we are justified in charging a higher labor rate for this service. The typical multiplier used is between 1.25 – 1.5 of normal labor rate.

**Labor rate multiplier: $125.00 x 1.25 = $156.25**

Additional resources needed to complete the job. At the Level 1 base-line testing you are going to have to pay for a number of information subscriptions. These include Mitchell, Alldata, iATN, Identifix base subscription. The best way to determine a fair compensation for these services is to add up the annual cost of the services and divide by the number of Level 1 packages sold last year. If you don't have that number, then find the total number of vehicles serviced last year and use a percentage based on your observation of your shops workflow. For our example we are going to use 25% of our car count of 3500 per year. Our total expenses for the year on these services are $3650.00. Here's how it breaks down:

**25% of 3500 = 875.**
**$3650 divided by 875 = $4.17 cost per vehicle for subscription services**
Use your normal parts matrix to determine the retail value of this fee. For our example we will use a multiplier of 3. **$4.17 x 3 = $12.51**
**NOTES:**

_____

**Now we add up the numbers to get our final package price.**

Billable Hours = _____ X Labor Rate _____ A: _____
Labor Rate Multiplier = _____ X (A) _____= B: _____
Additional Resource Fee = C: _____
Now Add up A, B, &C = _____
You've now identified your Level 1 Base-Line testing fee at $168.56

**Level 2 Advanced Problem Solver Analysis Package**

Billable Hours = ____ X Labor Rate _____ = A. _____
Labor Rate Multiplier = _____ X (A) _____ B. _____
Additional Resource Fee = C. _____
Total = _____
You've now identified your Level 2 Advanced Problem Solver Analysis Package fee at $_____

**Please note that each package is a separate testing service and the fee for level 2 is separate from the fee charged in level 1.**

**Let's look at the difference in revenue by following this system.**

The old method of charging by the hour.
Level 1 = $_____

New method of charging package pricing
Level 1 = $_____

If a typical shop does 50 Level 1 packages per month,
the additional revenue for the shop would = $_____ per month or $_____ per year.

# Step #5 Perfect Your Sales Presentation

1. Welcome to _____, How may I help you?

2. I will be happy to help you with that; I will just need to get a little more information from the vehicle do you have your keys? Great….follow me. **Remember to SMILE and be pleasant.**

3. By the way, my name is _____. May I get your first name?
   *Rapport Building Tip** This is where you want to have a conversation with your customer and begin to build the relationship. Your goal during the initial walk around is to gather important and useful information. Identify the customer's vehicle time-line. Ask them how their day is going? Then begin by inputting all pertinent information into a new estimate screen on your computer. You should pay close attention to your client, listen and try to identify the concerns the client has. Focus on building the relationship.*

4. Mr. / Mrs. _____ exactly, what is the vehicle doing?
   And how long has it been doing this?
   (Gather as much information in this step as possible. You are building your ticket. Each client concern should have a separate labor line)

5. Mr. / Mrs. _____ based on your concerns there are a number of things that can cause the concern you have described. So right now, what we have are more questions than answers, to resolve your concern, we need to begin with our Level 1 Test Package**. It is the first step in getting your _____ diagnosed correctly, and repaired, in the most affordable way**. Does that make sense? Great, let's get started.

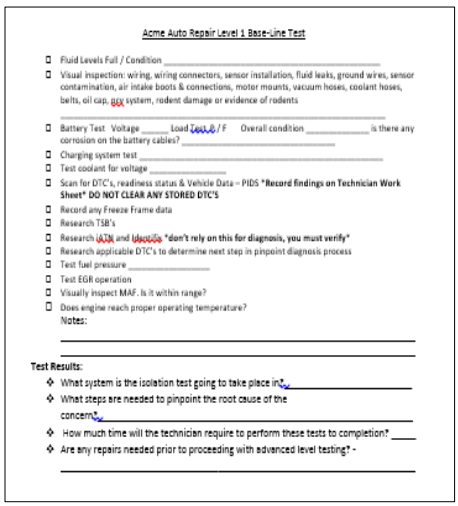

Acme Auto Repair Level 1 Base-Line Test

- ☐ Fluid Levels Full / Condition _____
- ☐ Visual inspection: wiring, wiring connectors, sensor installation, fluid leaks, ground wires, sensor contamination, air intake boots & connections, motor mounts, vacuum hoses, coolant hoses, belts, oil cap, pcv system, rodent damage or evidence of rodents
  _____
- ☐ Battery Test Voltage _____ Load Test P / F Overall condition _____ is there any corrosion on the battery cables? _____
- ☐ Charging system test _____
- ☐ Test coolant for voltage _____
- ☐ Scan for DTC's, readiness status & Vehicle Data – PIDS ***Record findings on Technician Work Sheet* DO NOT CLEAR ANY STORED DTC'S**
- ☐ Record any Freeze Frame data
- ☐ Research TSB's
- ☐ Research ATK and Identifix ***don't rely on this for diagnosis, you must verify***
- ☐ Research applicable DTC's to determine next step in pinpoint diagnosis process
- ☐ Test fuel pressure _____
- ☐ Test EGR operation
- ☐ Visually inspect MAF. Is it within range?
- ☐ Does engine reach proper operating temperature?
  Notes:
  _____
  _____

**Test Results:**

- What system is the isolation test going to take place in? _____
- What steps are needed to pinpoint the root cause of the concern? _____
- How much time will the technician require to perform these tests to completion? ____
- Are any repairs needed prior to proceeding with advanced level testing? -
  _____

*At this point of the conversation, you want to show your client your Level 1 Base-Line Test report and sample package. Continue the conversation by explaining the benefits and making the point that the client will be getting this information when the test is complete. Also, explain that you have various levels of testing that might need to be done to resolve their concern, however, we need to start at level 1.*

Notes: _____
_____
_____
_____

6. Here's the checklist that my technician Tim will be using today. This process is designed to help you get this concern resolved in the least amount of time, and it also ensures that we follow a logical step by step process to ensure we save you money. When the test is finsihed, I will get his report, and we will be able to review the results together. You have my word that I will do everything within my power to save you money and get this car back on the road in the most efficient way. The fee for our Level 1 Base-Line test is $168.56, and I just need your signature here, and I will get Tim started on it right away.

**If the customer objects to the testing fee and asks, "*you mean you are going to charge me just to look at it?"***

7. _____ That is a great question, and thanks for asking. You see, we would be wasting a lot of your time, and your money, if we went ahead and did any service that we thought *might* solve your problem. So rather than guessing, what we like to do is take the guesswork out of it completely. What we need to do is a complete, systematic diagnosis, so we can pinpoint exactly what caused your concern.

**You might also consider**

Mr. / Mrs.____ our Testing Packages more than pays for themselves when you consider the amount of time, and money that you would waste if we tried to take shortcuts or guess as to what the problems could be. Our goal is to save you time, and money _____, and that is why our Level 1 is the right place to start. I would rather be upfront and honest with you about having to charge for professional testing fees, than hoping a "free look under the hood" might solve your problem, does that make sense?

8. _____ you made a good decision, as a next step I am going to dispatch your vehicle to Tim, and he will begin the process right away. Our shuttle driver Scott will be here in 5 minutes to get you to work, can I get you a cup of coffee?

# Selling Advanced Level Testing

Case Study 2005 Dodge Ram 2500 5.9l A/T 4x4. Client Concern.
Dodge came out and did the airbag recall. Airbag light flickers ever since the airbag was replaced.
Had a battery replaced (both batteries have been replaced).
Intake air heater code is a history code, the customer has known about this for a long time.

- Brake light = ON
- AirBag light = ON
- Check Engine Light = ON
- Check all warning lights on the dash that are illuminated.
- Vehicle lacks in power upon acceleration.

**Level 1 Test has been approved. Here are the results:**

- The baseline checklist:
  - Fluid Levels – Oil 1 quart low, Transmission good, P/S good, Brake good, Coolant low.
  - Battery test – good
  - Charging system test – good
  - Filters – Air filter dirty
  - Intake Air System – code for intake heater is present
  - Fluid leaks – Transmission fluid leaking, Engine oil leaks.
  - DTC's Stored in System:
    - P0107 Manifold Absolute Pressure Sensor Circuit Low.
    - P0073 Ambient Air Temperature Sensor Circuit High.
    - P2609 Intake Air Heater System Performance.
    - U0121 Lost communication with ABS module.

Technician discovered the ABS speed harness was melted on the passenger front wheel. Requesting an additional 3 hours for advanced testing and repair to main wiring harness.

***Now it's time to call your client:***

Hello _____ this is _____ from _____ do you have a couple minutes?

*Very important to build and maintain rapport during this process. Review the client's concerns and be friendly!*

I have received the test results from Tim, and I would like to go through those now.

We have made progress, and the good news is that the base-line mechanical systems on the vehicle passed and appear to be in proper working condition.

***At this point you want to review a couple facts from the technician worksheet:***

- _____
- _____
- _____

During the test Tim discovered 4 trouble codes. He was able to identify that the vehicle has a wiring issue within the wiring harness of the vehicle. The right front ABS speed harness has melted, and the computer has lost communication. As a next step we do need to move into Advanced testing to allow Tim the time he needs to identify the root cause of melted harness and restore communication to the computer system. He's ready to move forward and would like to resolve this concern today. The fee for the Advanced Level testing is an additional $477.00. Which would bring our total up to $648.51. Plus, any parts that he identifies will need to be replaced. Does that work for you?

Ok, I will let Tim know to proceed, and I will keep you updated every step of the way.

## When Selling Advanced Level Testing:

- Always leave the door open. Never tell a customer any test will be conclusive or will "Diagnose" their concern.
- Remember to sell the test results.
- Reassure your client that you are doing everything within your power to solve their concern in the most affordable way and you are going to save them money
- Be confident, if you waiver at all the customer will smell your fear and will begin questioning your ability to properly diagnose their concern.
- Practice, Practice, Practice. Get a roleplay partner and work on this skill each week. If you need help locating a roleplay partner go to www.Advisorfix.com
- Always update them with a running total as each level builds into the next one.

## Step # 6 Consistently Monitor Your Packages and Make the Proper Adjustments.

As you progress on your journey to success, you will need to make adjustments. You have to be able to adapt. Here are some tips to help you perfect your systems:

## Perfecting Your Systems:

- Constantly meet with your team and listen to their feedback
- Track what is working and what is not working. You will get feedback from your clients as well as your technicians. It is important to listen. Gather the information from this feedback and then make informed decisions
- Have a monthly shop meeting to discuss the packages and make appropriate changes
- Become the local expert for the vehicles you service. Attending training conferences like VISION are the best way to ensure you are staying ahead of the curve.
- Become a student of sales. Study sales in every industry and adopt what will work for you. As a Trusted Service Advisor, your most critical asset is your ability to deal with people and influence them to your way of thinking

### Perfecting Your Skills

As a Trusted Service Advisor you should be on a quest of constant and never-ending improvement. Here are some tips to help you constantly improve your skills.

1. Identify your lost sales & practice those sales objections weekly
2. Record your sales presentations
3. Read 1 new book on sales every month
4. Track your sales and set daily sales goals
5. Get a success partner or a success coach

Notes:

_____
_____
_____
_____
_____
_____
_____
_____
_____
_____
_____
_____
_____
_____
_____

## Your Journey to Sales Mastery

Your journey doesn't stop here. As you head back to your shop you are face with a daunting task. Our industry is changing at an increasingly fast pace! In order to succeed you must stay at the top of your game. My hope for you is that you will continue your journey towards mastery. In an effort to help you achieve Mastery at this subject I have prepared a 30-day action plan. Visit www.Advisorfix.com if you need support with your action plan.

***30 Day Action Plan***

Step #1 -Clearly identify your testing packages with your team by:

Target date: _____

Step #2 – Identify a role play partner and practice at least one time per week for the next 30 days. This person will also serve as your accountability partner.

Role Play Partner Identified:

Name: _____

Phone: _____

Email: _____

Date & Time of first Role Play Session: _____

Step #3 – Read and Review your workbook 1 time each week for the next 4 weeks.

Step #4 -Re-write your notes from the class and put into your own action plan. Do this no later than Monday!

If you need further support, please contact:
Jeremy O'Neal
951-532-0487 call or text
Jeremy@Advisorfix.com
www.Advisorfix.com